GENERAL NOTES:

1. PIER LOADS SHOWN ARE TO BE USED TO SIZE THE FOOTINGS BELOW THE MARRIAGEWALL FOR COLUMN SUPPORT PIERS. REFER TO TABLES 6b AND 6c IN THE INSTALLATION MANUAL FOR LOAD ON FRAME PIER FOOTINGS FOR HOMES THAT DO NOT REQUIRE PERIMETER BLOCKING. REFER TO TABLES 7b AND 7c IN THE INSTALLATION MANUAL FOR LOAD ON FRAME PIER FOOTINGS THAT REQUIRE PERIMETER BLOCKING. REFER TO TABLES 10 AND 10a TO DETERMINE FOOTING SIZE FOR ALL PIERS.
2. REFER TO TABLE 9 FOR PIER CONFIGURATION AND MAXIMUM ALLOWABLE HEIGHTS. CROSS REFERENCE THE PIER HEIGHT WITH THE MAXIMUM ALLOWABLE FLOOR HEIGHT LISTED IN THE FRAME TIEDOWN CHARTS (TABLE 18, 19, AND 20).
3. FLOOR WIDTH SHOWN IS FOR STANDARD PRODUCT ONLY. CONTACT THE MFG PLANT FOR SPECIFICATIONS OF OPTIONS ORDERED.
4. SERVICE DROP LOCATIONS IDENTIFIED ARE APPROXIMATE.
5. THE MAXIMUM SPACING FOR FRAME SUPPORT PIERS FOR 8" I-BEAMS IS 8 FEET, 10" & 12" I-BEAMS ARE 10 FEET.

20 psf Roof Live Load

Column Pier #	Distance from Hitch	Pier Load (lbs)
1	25.833	2754
2	37.75	2754
3	56.667	2128
4	65.417	2128

SERVICE DROP LEGEND

- E = ELECTRICAL DROP
- W = WATER INLET
- D = DWV PLUMBING DROP
- G = GAS INLET

PIER LEGEND

- = SUPPORT UNDER MATING OPENING
- = SUPPORT AT MATING COLUMN
- = SUPPORT UNDER MATING WALL
- = PIER PORCH/RECESSED ENTRY
- = PIER MAIN BEAM
- = PIER PERIMETER
- = TIE-DOWN SUPPORT (QTY PER TBL M, SEE DETAIL D-6 IN FOUND. PKG.)

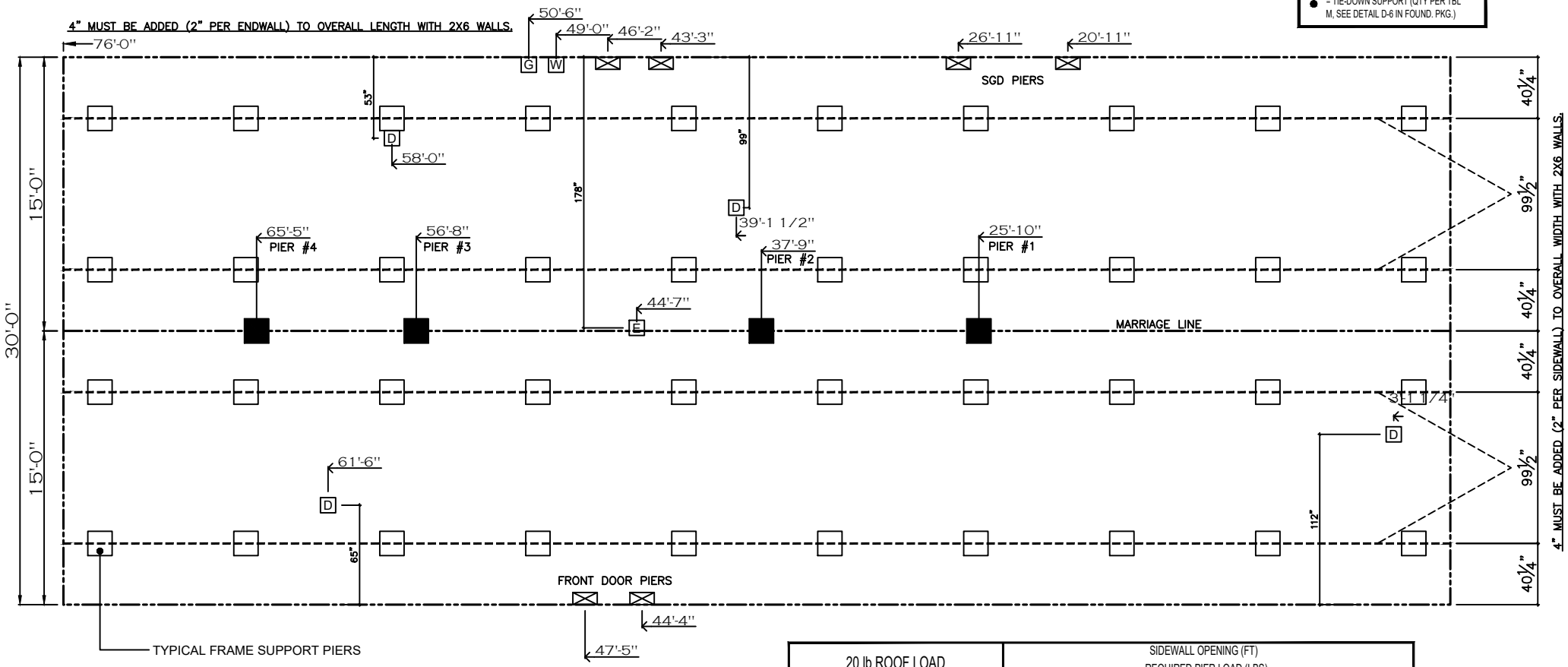

20 lb ROOF LOAD SIDEWALL OPENING PIER LOAD 28' BOX WIDTH	SIDEWALL OPENING (FT) REQUIRED PIER LOAD (LBS)					
	3	4	5	6	8	10
	1175	1330	1485	1640	1950	2260

*FOR 30 lb & 40 lb ROOF LOAD REFER TO TABLES 7b & 7c IN THE INSTALLATION MANUAL.

SHEET:						
MP	PIER SET	Clayton Clayton - 934 1420 Mountain Rd, Andersonville, TN 37705 PH: 865.494.7800 FAX: 865.494.0243	HILBORN,WERNER,CARTER, AND ASSOCIATES, INC. 1627 SOUTH MYRTLE AVE. CLEARWATER, FL. 33756	DRAWING #: 34M202	MODEL: THE FUSION-H (32 x 76)	STD PLAN "CONDITIONED": 2,280 FT²
				MODEL #: FSN32765A	SERIES: FUSION SERIES	REV. BY:
				DATE: 07/31/2023 SCALE: N.T.S.	PRODUCT DESIGNER: BRIAN K. RIFFEY	REV. DATE: